DROP DECK 48' 10'1" SPREAD

All lengths in inches and weights in pounds

Printout of Load Xpert software

42" height

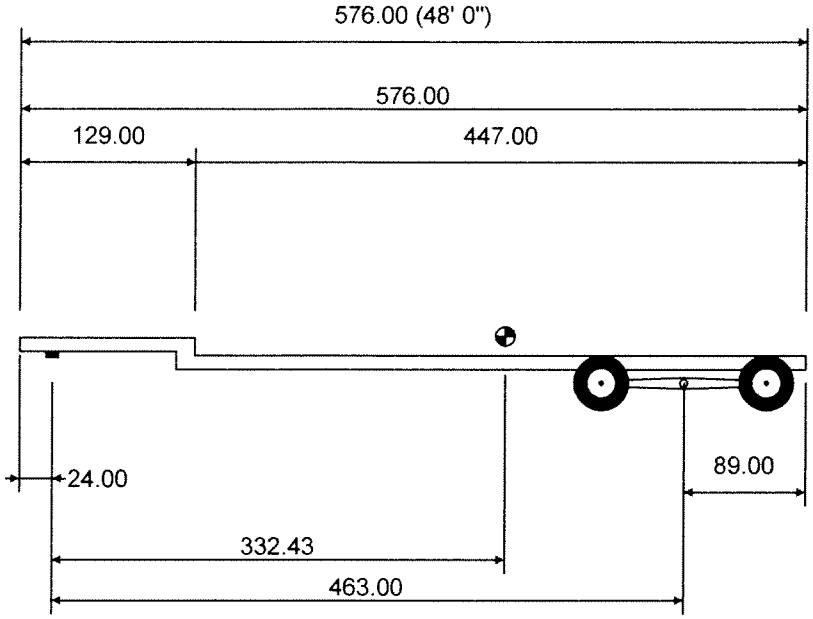

(Total =121)

121

2087

Axle Loads:	#1 (lb)	Total (lb)
Tare:	8300	8300
Accessories:	0	0
Payload:	0	0
Total:	8300	8300
Desired/(GVW)*:	40000	-
GAWR/(GVWR*):	40000	-

Overall C.G. height from ground (in):	N/A

Title:	Company:	Date:
	Ref.:	By: